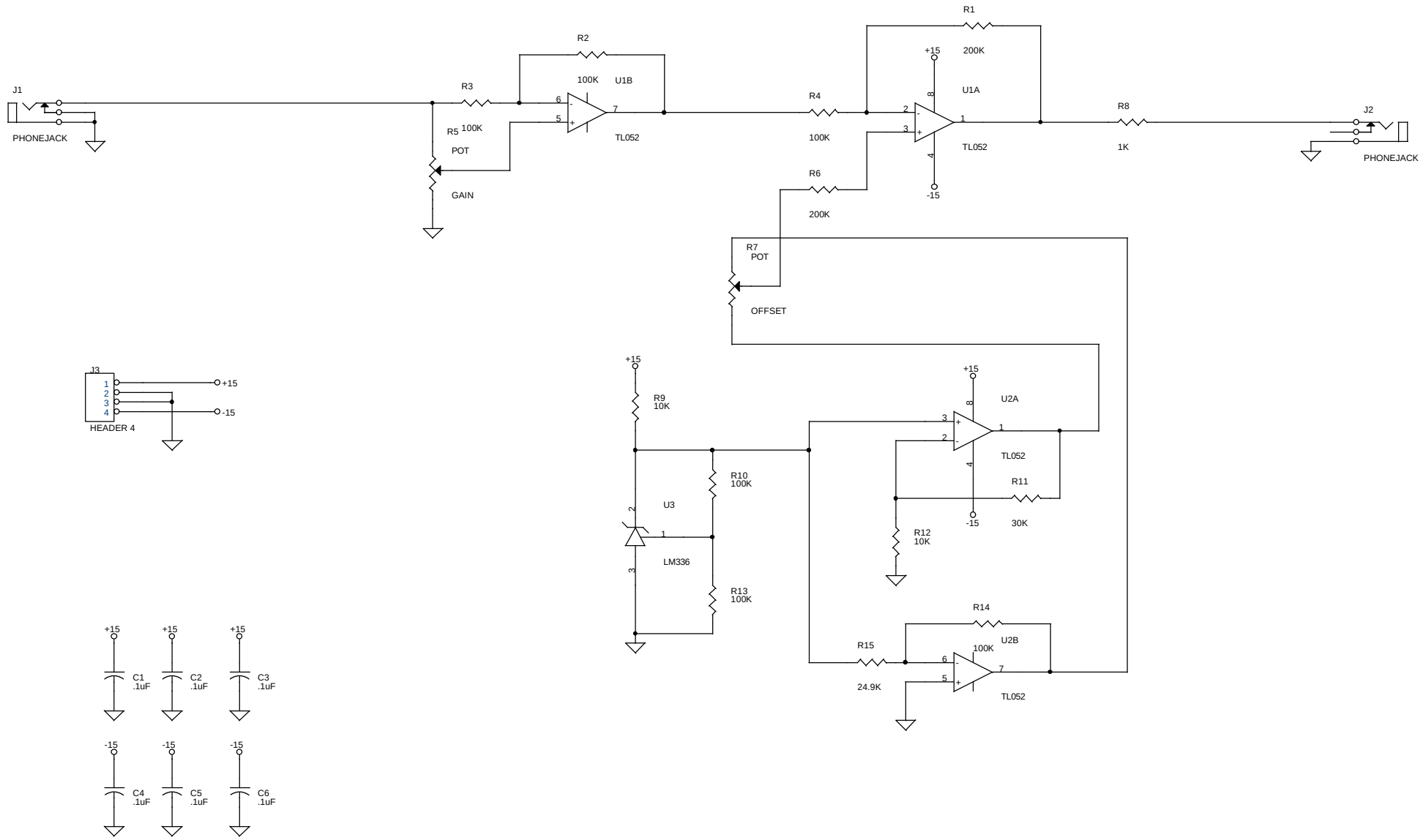

Title	**CONTROL VOLTAGE PROCESSOR**	
Size	Document Number **200-1018**	Rev NC
Date: Monday, October 28, 2002	Sheet 1 of 1	